CS-BATTERIES
LITHIUM EXPERTS

5 YEARS WARRANTY

TECHNICAL DATA CS24-100

340mm | 190mm | 248mm

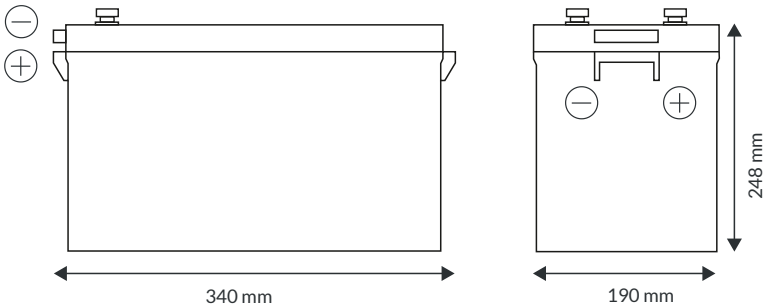

Connection M8 female thread

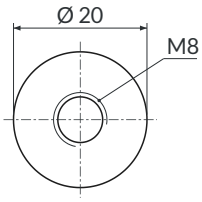

SMART POWER SERIES

Versatile, powerful, affordable. With our new SMART Power series we offer a LiFePO4 lithium leisure battery with innovative frost protection management at a smart price. Developed for motorhomes, camper vans, caravans, boats, fishing and energy storage.

Prismatic Smart Cells (PSC)

Our SMART Power series uses our latest Grade A LiFePO4 prismatic smart cells, consisting of four cells connected in series. We do without conventional cylindrical cells, delivering more performance, longer service life and greater safety.

- **Maximum use of space**
- **Few cell connectors**
- **Lower weight**
- **Quick installation**
- **High safety and long service life**
- **High reliability**
- **No fire hazard**
- **No risk of explosion**

Power Battery Management System (BMS)

The newly developed Power Battery Management System is based on the latest microcontroller technology. It monitors your battery and protects it from damage in every application. The BMS is connected to each cell individually and monitors it continuously.

Key BMS functions:

- **State-of-charge monitoring via app**
- **Multi-Charge Mode (MCM)**
- **Frost Protection Management (FSM)**
- **On/off switch via app**
- **Cell heating control**
- **Overload protection**
- **Deep discharge protection**
- **Overvoltage protection**
- **Active cell balancing**
- **Charge monitoring**
- **Full temperature monitoring**

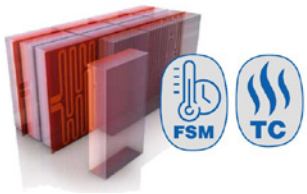

Frost Protection Management (FSM)

The SMART Power leisure battery has been optimised for cold environments with cell heating. The newly developed BMS ensures charging and discharging down to -30°C. At low temperatures, the temperature sensor integrated in the BMS activates the automatic cell heating, warming the cells evenly and gently before charging. For trouble-free winter storage, the charge and discharge enable via the app also helps. Safe disconnection protects the battery from deep discharge, even during long periods of storage.

CS-Batteries App

The CS-Batteries app gives you direct Bluetooth access to the battery management system built into the battery. You can check the battery parameters and plan your trip optimally using the remaining runtime display.

The data can be conveniently displayed on a smartphone or tablet (Android / iOS).

- **State-of-charge display**
- **Easy use via Bluetooth 5.0 connection**
- **All key battery data at a glance**
- **Notification of warnings and limit values**
- **Very helpful for trip planning**
- **Display of remaining charging time**
- **Suitable for series and parallel connection**
- **On/off switch for charging and discharging**
- **Single display for multiple batteries**

GET IT ON Google Play

Available on the App Store

KECKEISEN AKKUMULATOREN

Stefan Keckeisen Akkumulatoren e.K.

Europastraße 9
87700 Memmingen

Fon +49(0)8331 94444-0
Fax +49(0)8331 94444-9

info@intact-batterien.de
www.intact-batterien.de

APPLICATIONS: Caravan, motorhome, marine, electric drive, solar and wind generator storage, UPS power supply, energy storage

DATA / ORDER NO.:	CS24-100
EAN	4251847303090
Capacity	100Ah
Replaces lead-acid gel/AGM battery	200Ah
Nominal voltage	25.6V
Energy content	2560Wh
Operating voltage	22.0 - 29.2V
Parallel connection	yes, max. 4 units of the same type
Series connection	yes, max. 2 batteries in series (48V)
Cell technology	LiFePO4 / LFP
Cell type	Prismatic Smart Cells (PSC)
Charging profiles	CC/CV | IU | IUoU | lead-acid
End-of-charge voltage	28.4 - 29.2V
Float charge	26.6V
Max. charging current	50A
Recommended charging current	20A
Max. discharge current / 3 s	200A
Continuous discharge current	100A
Battery disconnect	yes, via Bluetooth / app
Remote monitoring via Bluetooth app	integrated
Remote monitoring / shunt integrated	no
Ingress protection	IP52
Cycles / service life at 50% DoD	5000
Cycles / service life at 80% DoD	3500
Cycles / service life at 90% DoD	3000
Charging temperature	-30°C to +45°C
Discharging temperature	-30°C to +60°C
Recommended storage temperature	-30°C to +60°C
Automatic cell heating	built-in
Storage	charged to 80–100%; recharge every 6 months if unused
Self-discharge	2–3% / month
Terminals	M8 female thread
Positive terminal position	side or top
Dimensions (upright)	340 x 190 x 248 mm
Dimensions (on its side)	340 x 248 x 190 mm
Mounting position	any: upright, on its side or on end
CANbus interface	no
Weight	19.5kg
Warranty	5 years
Certification	UN38.3 | MSDS | CE | RoHS | ECE-R10 | E1/E57

TOP FEATURES

Smart Power BMS with Bluetooth 5.0

Integrated balancer

Automatic heating

Bluetooth main switch to enable charging and discharging

Up to 4 batteries in parallel, 2 in series

Frost protection management: safe charging and discharging down to -30°C

5 years warranty

UN38.3 and ECE-R10 certified

KECKEISEN AKKUMULATOREN
Stefan Keckeisen Akkumulatoren e.K.
Europastraße 9
87700 Memmingen
Fon +49(0)8331 94444-0
Fax +49(0)8331 94444-9
info@intact-batterien.de
www.intact-batterien.de